Parts List		
STOCK No	DESCRIPTION	QTY
1T1626	6mm Tube	1
2C1801	Cap Plastic 2 Start	2
2F1203	M4 Nut	2
2F1204	M8 Lock Nut	2
2F1629	M4 x 35mm Screw	2
2M1015	Yellow Plastic Washer	1
2M1086	Cartridge Locator	1
2M2583	Series 3 Rear Cap	1
2M2617	O-Ring Spacer	1
2M2623	Barrel Strap	1
2P1021	Split Sachet Plunger	1
2P1026	Series 2 Piston Body	1
2S1025	Cartridge Locator Spring	1
2S1069	Tube Protector Spring	1
2S2002	O Ring	1
2S2007	O Ring	2
2S2144	U Type Seal	1
2XB057	5mm Bearing	1
3B5048	Bulkhead	1
3F2419	Steel Washer	1
3P1006	Steel 40mm 'Tin Hat' Plunger	1
3XT016	Tube Cover	1
4B1400	Series 3 Butt (Single Component)	1
7A3503	Series 3 Regulator (100psi)	1
7B2002	Barrel 229mm	1
7B3057	Rear Barrel	1
7R1077	Rod 267mm	1
7XB036	Hexagonal Zinc Barrel Screw (Bushed)	1

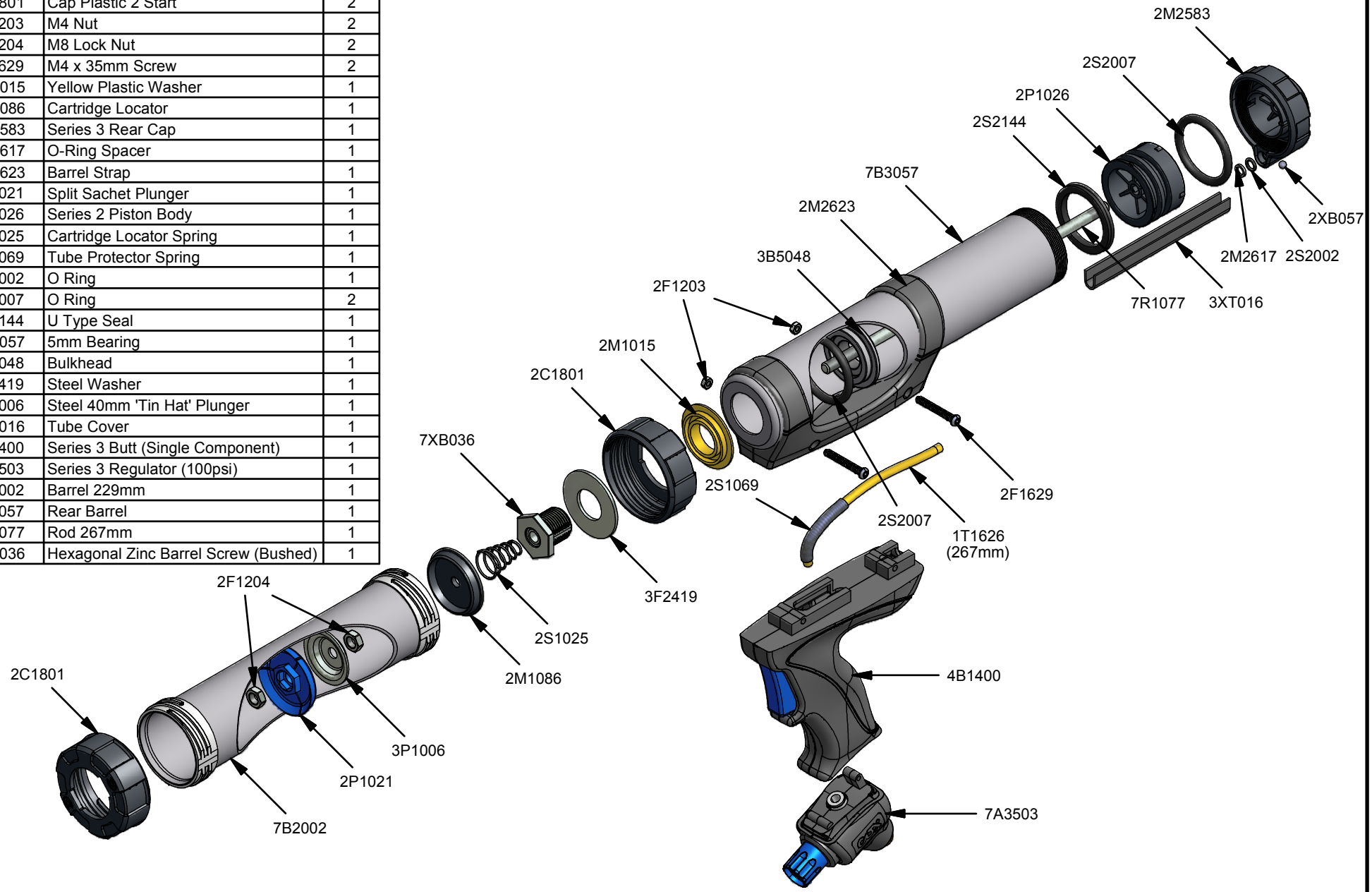

Airflow 3 Combi 310	The original	www.pccox.co.uk sales@pccox.co.uk TEL:44(0)1635 264500	REV	DATE
			A	24/08/2011

Parts List		
STOCK No	DESCRIPTION	QTY
1T1626	6mm Tube	1
2C1801	Cap Plastic 2 Start	2
2F1203	M4 Nut	2
2F1204	M8 Lock Nut	2
2F1629	M4 x 35mm Screw	2
2M1015	Yellow Plastic Washer	1
2M1086	Cartridge Locator	1
2M2583	Series 3 Rear Cap	1
2M2617	O-Ring Spacer	1
2M2623	Barrel Strap	1
2P1021	Split Sachet Plunger	1
2P1026	Series 2 Piston Body	1
2S1025	Cartridge Locator Spring	1
2S1069	Tube Protector Spring	1
2S2002	O Ring	1
2S2007	O Ring	2
2S2144	U Type Seal	1
2XB057	5mm Bearing	1
3B5048	Bulkhead	1
3F2419	Steel Washer	1
3P1006	Steel 40mm 'Tin Hat' Plunger	1
3XT016	Tube Cover	1
4B1400	Series 3 Butt (Single Component)	1
7A3503	Series 3 Regulator (100psi)	1
7B2002	Barrel 229mm	1
7B3057	Rear Barrel	1
7R1077	Rod 267mm	1
7XB036	Hexagonal Zinc Barrel Screw (Bushed)	1

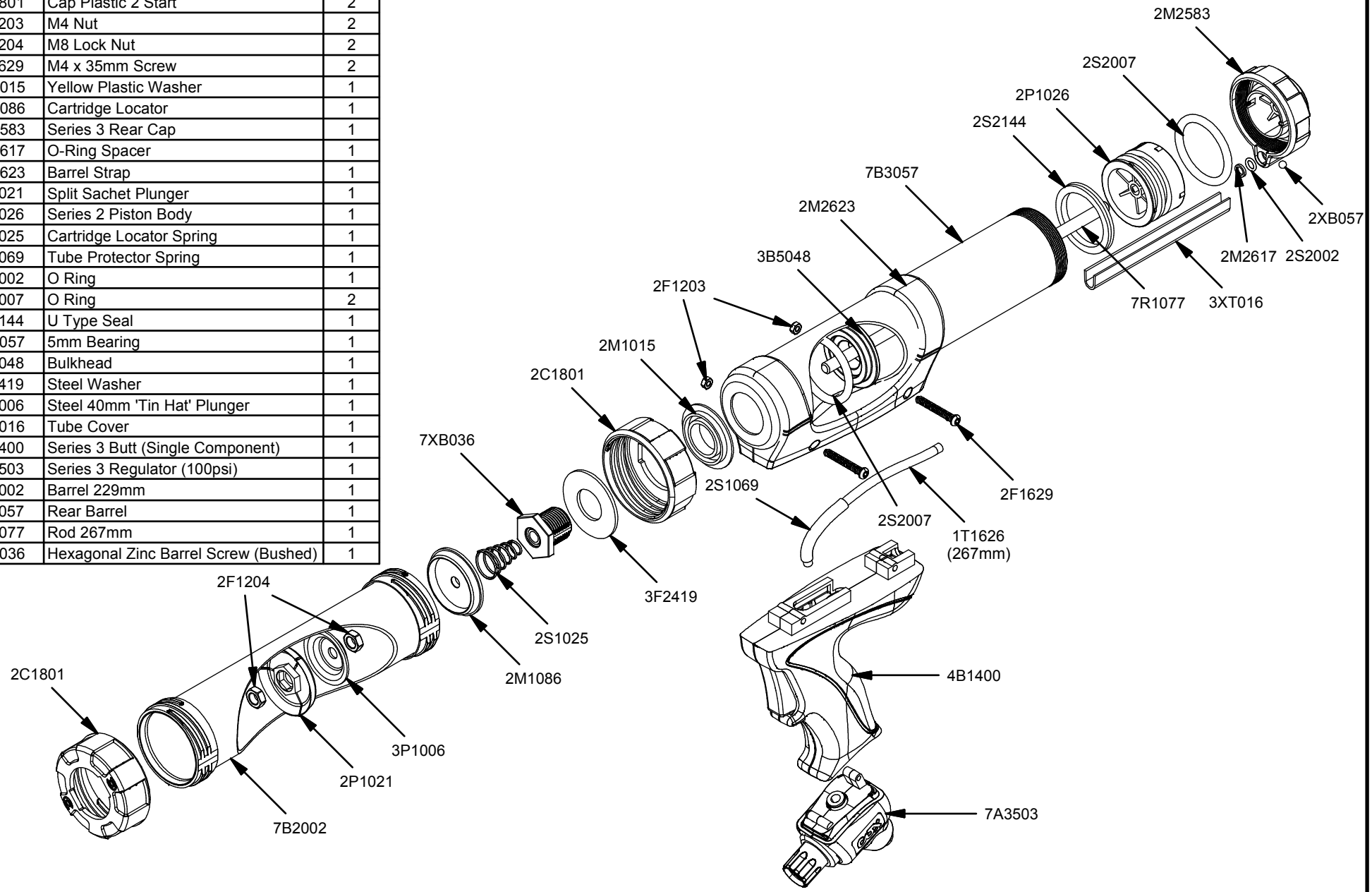

Airflow 3 Combi 310

The original

www.pccox.co.uk
sales@pccox.co.uk
TEL:44(0)1635 264500

REV	DATE
A	24/08/2011